SERVICE AND REPAIR DATA

ON HAMILTON 8/0 MOVEMENT

GRADE 747

HAMILTON SERVICE BULLETIN 202-A

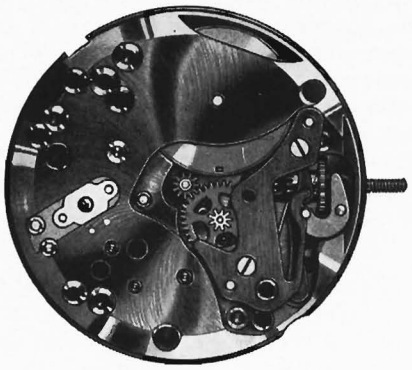

DIAL SIDE
2 x Actual

ACTUAL SIZE

TRAIN SIDE
2 x Actual

Summary Description of Hamilton Movement Grade 747

DESIGN: Hamilton Grade 747 is a modern three-quarter plate movement with wide bevels on the bridges and the pillar plate. Both bridges and the pillar plate are rhodium plated. The balance cock and both bridges employ integral steady pins. And a case alignment slot in the pillar plate provides for accurate and secure location of the movement in a case.

While Grade 747 is the first 8/0 movement Hamilton has ever manufactured in quantity, it is not the first one it has ever designed or made. Hamilton engineers and technicians have been designing and building and studying experimental 8/0 models for more than 10 years. While work on the movement was virtually abandoned during World War II, final development was not sacrificed. The experience and new knowledge acquired building war timepieces proved to be precisely the experience and knowledge needed to complete the project.

Grade 747 is a fine movement through and through. It is a fine looking movement. More than that, it is a fine watch to service or repair. For a quick summary of the outstanding features of Hamilton Grade 747 see the description below.

Size	8/0 Round
Jewels	17—Direct friction set
Winding and Setting	Rugged construction, smooth action; entire stem hole in pillar plate
Minute Wheel	Skeletonized for visibility of third lower jewel
Cannon Pinion	Improved fit to center staff
Click Spring	Extra long to reduce stress
Click	New design, affords increased recoil protection of mainspring
Setting Cap Spring	Accurately located by steady pins in pillar plate
Mainspring	Extra long for improved performance
Train	Completely new; maximum freedom, smoothness, and efficiency of operation
Escapement	Completely new; lever type; highly responsive
Balance	Mono-metallic; 18,000 oscillations per hour
*Balance Cap, Upper	Camlock construction for accurate alignment; no screws employed
Balance Cap, Lower	Steel, nickel-plated; two screw type; screws thread *into* cap from train side of pillar plate
Hairspring	Hamilton Elinvar-Extra; overcoiled
Hairspring Stud	Round, V-seated for accurate and convenient locating
Hairspring Stud Screw	Long head with deep slot
Regulator	Smooth, positive action
Screws	Employ new series of thread standards; balance screws designed with a "dog" point instead of cone point
Interchangeability	Complete except for hairspring which requires matching with balance wheel
Service Convenience	Maximum accessibility for all service and repair operations

* Patent Pending

HAMILTON WATCH CO. **LANCASTER, PENNSYLVANIA**

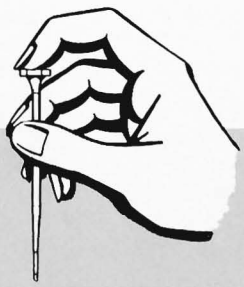

SERVICE BULLETIN

Performance Characteristics

Low deviation tolerance or steadiness of rate is the performance characteristic most desired in a timepiece. In the Grade 747 performance will more than maintain the Hamilton tradition. It is a fine watch and incorporates much of the advanced knowledge and experience acquired during World War II in the design, development, and manufacture of the now famous Hamilton Marine Chronometer and all other special war timepieces.
The design improvements which make the most significant contributions to performance of the Grade 747 are: the Hamilton Elinvar-Extra hairspring (see Technical Bulletin 200 on this subject); the train, which approaches the ultimate in freedom and smoothness; the escapement, which has been made acutely responsive; the barrel assembly, which permits the use of an extra long mainspring; and a new type click which, because it possesses greater recoil, relieves undue strain on the mainspring at full wind.

Service Suggestions

Replacement of Balance Staff, requires removing the collet, hairspring, and roller, following which the lower shoulder of the balance staff should be turned off in a lathe with a sharp graver. The old staff can then be safely pushed out with a standard staking set. Installation of a new staff and restaking can be done in the conventional manner. For detailed data on replacement of damaged balance staffs, a Technical Bulletin on this subject will be furnished. Watchmakers who have a file of Hamilton Technical Data Sheets should refer to T.D. 129.

Hairspring Manipulation will be virtually unnecessary in Hamilton Grade 747. Elinvar-Extra hairsprings are rugged and with reasonable care in handling will not be distorted. In addition, the assembly convenience provided by the new accurately aligned balance upper endstone cap and the regulator removes the need for hairspring manipulation. When and if hairspring manipulation is essential, watchmakers will find the illustration in Fig. (1) showing the characteristic shape and position of the overcoil to be a useful reference.

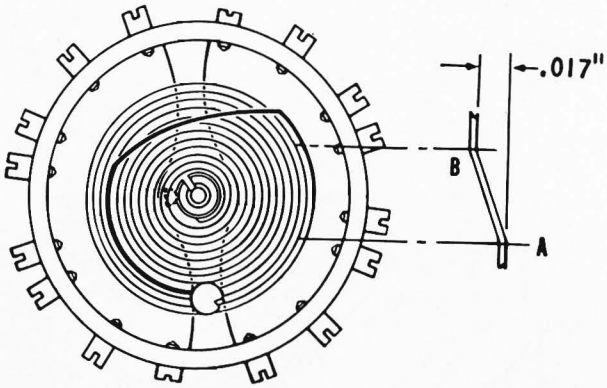

FIGURE 1
OVERCOIL SHAPE ON
HAIRSPRING FOR
HAMILTON GRADE 747

Dis-assembly of the Grade 747 movement can be done in the conventional manner except for the balance upper endstone cap. This part is of unique construction; see paragraph entitled "Balance upper endstone cap" for dis-assembly procedure. The balance lower endstone cap, while it is not of unique construction, can not be removed until the balance has been removed. See the paragraph "The balance lower endstone cap" for details.

Assembly of the Grade 747, with the exception of the balance upper (and lower) endstone cap, can follow the conventional order. See section "Replacement of Jewels" . . . "The balance upper endstone cap" . . . and "The balance lower endstone cap".

Balance Wheel Screws used in Hamilton Grade 747 are different from those used in any other Hamilton movement. Like all other screws used in the movement, the balance wheel screws employ a new thread standard. So that these screws will readily be distinguished from balance screws in other Hamilton movements they have been designed with a dog point instead of the cone point commonly used. Under no circumstances should a watchmaker attempt to substitute balance screws on this movement. He will invite difficulties which, under extreme circumstances, may make it necessary to replace the balance wheel.

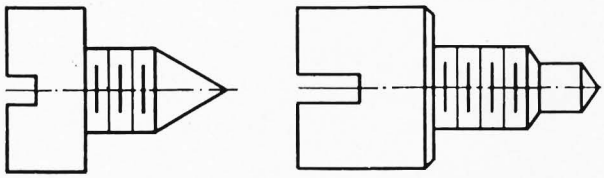

COMMON CONE POINT BALANCE SCREW

DOG POINT BALANCE SCREW USED IN HAMILTON GRADE 747

FIGURE 2

Replacement of Jewels

All balance and train jewels in Grade 747 are friction set directly in the plate and bridges. Removal or replacement of these jewels *requires that they be pressed—not driven*—in or out of position. Friction set jewels should, of course, be pressed out in the opposite direction from which they were inserted. Conventional staking sets with either a lever or screw press attachment can be employed.

To replace bar hole jewels, use a flat faced punch *larger* than the diameter of the jewel. Press jewels into position from the *inside* of the pillar plate and from the *train side* of bridges. Lower bar hole jewels must be pressed flush with their respective recesses. Endshake adjustments should be restricted to upper jewels; such adjustments can best be done with the same punch used to remove the jewel.

To replace olive hole jewels, use a hollow staking tool smaller in diameter than the jewel. Press these jewels into position from the *dial side* of the pillar plate and from the *top side* of the balance cock. Care must be taken to allow the proper amount of space between the jewel and the endstone for oil.

The balance upper endstone cap assembly is completely new in design. (See Figs. 3 and 4.) The new design affords accurate alignment of the upper endstone cap which, when the regulator is positioned around it, reduces the need for hairspring manipulation. The balance upper endstone cap can be easily and quickly replaced. Remove balance cock, invert it and, with a screw driver of proper width, unlock the cam as you would unscrew a screw and remove it. If the endstone cap does not drop free from the balance cock it can be gently pushed out by placing it on an anvil over the proper size hole and pushing on the feet. To replace a new cap, reverse the dis-assembly steps being sure that the retaining cam is snugly anchored but not forced.

The balance lower endstone cap on Grade 747, unlike this part on other Hamilton grades, is held by two screws which enter from the train side and thread into the cap which is made of nickel-plated steel. This feature is employed to eliminate the occasional annoyance of stripped threads in the pillar plate. Flat fillister head screws are used to secure a flat seating of the part. Assembly of the balance lower endstone cap to the pillar plate requires no special tools or methods. The cap can be positioned bottom side up on the bench; then the pillar plates with the recess for the cap aligned with it can be placed over the cap. A rounded pointer can be used to line up the screw holes in the cap with those in the pillar plate. The screws then can be located and fastened.

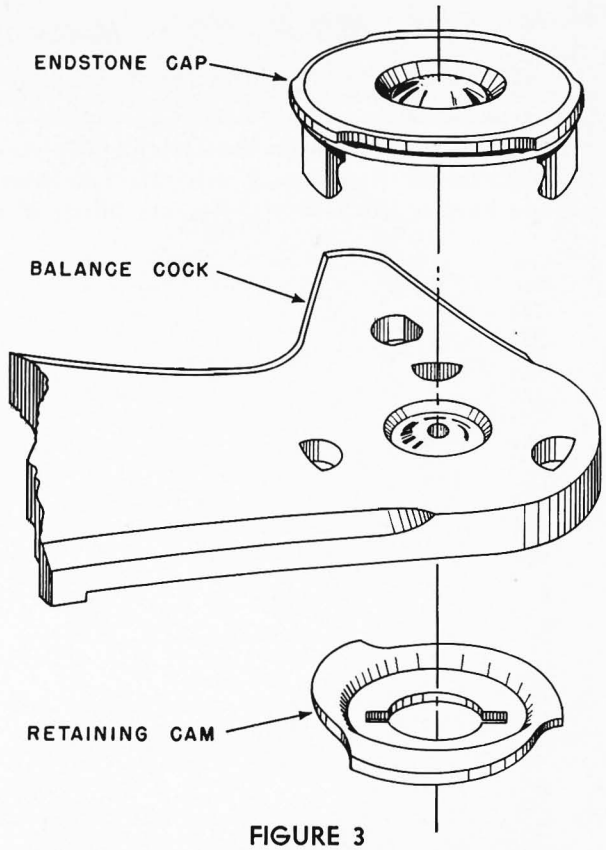

FIGURE 3

EXPLODED VIEW OF BALANCE UPPER ENDSTONE CAP ASSEMBLY

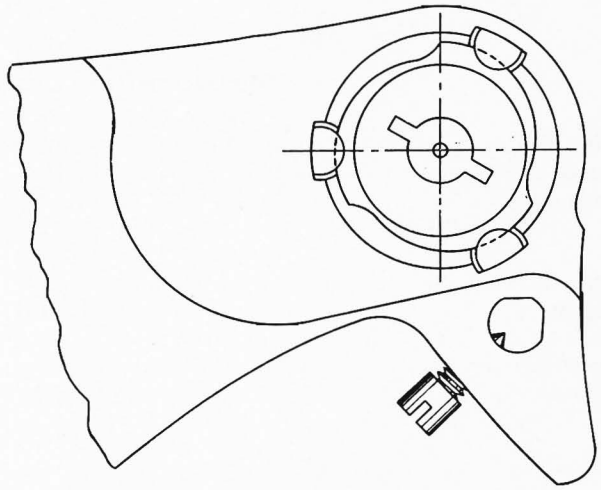

FIGURE 4

PLAN VIEW OF UNDER SIDE OF BALANCE COCK WITH RETAINING CAM ASSEMBLED

Genuine Repair Materials for Hamilton Grade 747

The following is a complete list of the available repair materials for the Hamilton 8/0 Size, Grade 747 movement. Material orders should always be sent to Hamilton Material Wholesalers. A list of the company's Material Wholesalers will be furnished on request to the Material Sales Department, Hamilton Watch Co., Lancaster, Pa. Always order material by catalog number and part name to insure accurate filling of orders.

Cat. No.	*Material*
7211	**Arbor,** barrel
7234	**Arbor,** pallet
7253	**Balance,** with screws
7254	**Balance,** (with screws) and staff
7255	**Balance,** complete
7205	**Barrel**
7206	**Barrel** and **arbor**
7209	**Cam,** balance upper endstone cap retaining
7219	**Click**
7215	**Clutch**
5065	**Collet,** hairspring
7279	**Endstone Cap,** balance upper
7280	**Endstone Cap,** balance lower
7210	**Hub,** winding wheel
7267	**Jewel,** center upper
2568A	**Jewel,** center lower
7269	**Jewel,** third or fourth upper
7270	**Jewel,** third lower
7272	**Jewel,** fourth lower
7273	**Jewel,** escape upper
7275	**Jewel,** escape lower and pallet upper or lower
7277	**Jewel,** balance upper or lower
2983	**Jewel,** roller
7281	**Stone,** pallet, receiving
7282	**Stone,** pallet, discharging
7218	**Lever,** clutch
7222	**Lever,** setting
7221	**Mainspring,** Str. 9
7256	**Pallet** and **fork**
7257	**Pallet, fork** and **arbor**
6095	**Pin,** banking
7229	**Pinion,** cannon

Cat. No.	*Material*
7233	**Pinion,** escape
7214	**Pinion,** winding
7258	**Regulator**
2963	**Roller,** combination, complete
7284	**Screw,** balance
7293	**Screw,** balance lower cap
7286	**Screw,** bridge or balance cock
7288	**Screw,** click
7291	**Screw,** dial foot
7295	**Screw,** hairspring stud
7294	**Screw,** pallet bridge
7297	**Screw,** ratchet wheel
7294	**Screw,** setting cap spring
7300	**Screw,** setting lever
7293	**Screw,** winding wheel hub
7220	**Spring,** click
7225	**Spring,** clutch lever
7240	**Spring,** setting cap
7261	**Spring,** hair, Elinvar Extra
7227	**Staff,** balance
7226	**Stem,** winding
6266	**Stud,** hairspring
7245	**Wheel,** center and pinion
7248	**Wheel,** third and pinion
7250	**Wheel,** fourth and pinion
7252	**Wheel,** escape and pinion
7241	**Wheel,** hour
7242	**Wheel,** minute
7216	**Wheel,** setting
7207	**Wheel,** ratchet
7208	**Wheel,** winding

The Hamilton Cushion Balance System

The Balance Wheel is designed with S shaped arms to protect against shocks in an axial direction (parallel to the staff).

The Balance Staff is designed with long, double tapers on each end and is made of a special alloy called Resilium. This special design staff of a special alloy protects against shocks in a radial direction.

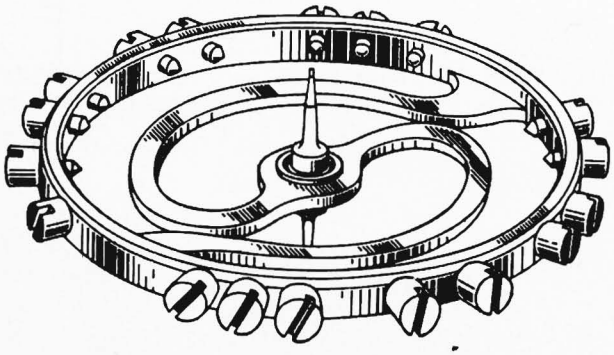

The Balance Jewels are held rigidly in place by conventional methods. They do not separate during shocks, which enhances the staying properties of the oil.

Replacement of Damaged Balance Staffs will be at a very minimum. For replacement, remove the roller by holding the collet end of the staff tightly in a suitable chuck or collet of the watchmaker's lathe, and pry off the roller with hand removers. The rim of the wheel will support it sufficiently, against the face of the chuck, to prevent distortion of the wheel. Remove the staff as normally done by cutting off the hub with a sharp graver, in the lathe. For more detailed information on this method of staff removal, consult Hamilton Technical Data 129. If properly done as described in this bulletin, little or no truing of the balance wheel is necessary.

Cat. No.	*Material*
7227A	**Staff,** balance
7253A	**Balance** wheel, with screws
7255A	**Balance** wheel, complete

All other part numbers are the same as for watches without the Cushion Balance Wheel.